SPECIFICATION

宏致電子股份有限公司

桃園縣中壢市東園路13號

No.13, Dongyuan Rd., Jhongli City,

Taoyuan County 320, Taiwan (R.O.C.)

TEL: +886-3-463-2808
FAX: +886-3-463-1800

SPEC. NO.: PS-92507-TXXX-CA1 **REVISION:** O

PRODUCT NAME: WTB CONNECTOR

PRODUCT NO: 92507 SERIES

PREPARED:	CHECKED:	APPROVED:
Jay	**David**	**Jason**
DATE: **2017/07/06**	DATE: **2017/07/06**	DATE: **2017/07/06**

1 REVISION HISTORY 3
2 SCOPE 4
3 APPLICABLE DOCUMENTS 4
4 REQUIREMENTS 4
5 PERFORMANCE 5
6 PRODUCT QUALIFICATION AND TEST SEQUENCE 6
7 ANATOMY OF CRIMPING TERMINAL 7
8 APPLICABLE WIRES: 7
9 CRIMPING CONDITION 8
10 CRIMPING HEIGHT MEASUREMENT 9
11 PULL FORCE OF CRIMPING SECTION MEASUREMENT 10
12 STANDARD INSULATION CRIMPING 10
13 CONDUCTORS CRIMPING CONDITION 11
14 CRIMPING REQUIREMENT 12

1 REVISION HISTORY

Rev.	ECN #	Revision Description	Prepared	Date
O	ECN-1707036	NEW SPEC	Jay	2017/07/06

2 SCOPE

This specification covers performance, tests and quality requirements for WTB Connector Terminal :92507-TXXX-CA1.

3 APPLICABLE DOCUMENTS

QC/T 417.1-2001: ELECTRONICS INDUSTRIES ASSOCIATION

4 REQUIREMENTS

4.1 Design and Construction

4.1.1 Product shall be of design, construction and physical dimensions specified on applicable product drawing.

4.2 Materials

4.2.1 Contact: Copper Alloy and SUS
Finish: Pls Refer to the drawing.

4.3 Ratings

4.3.1 Test Current: 4 Amperes Max.
4.3.2 Operating Temperature : -40℃ to +85℃

4.4 Applicable Wires: FLRY-B Nominal cross-section 0.5mm^2

5 Performance

5.1. Test Requirements and Procedures Summary

Item	Requirement	Standard
Visual Examination	Visual on any aliform. (QC/T 417.1-2001 4.2.2)	Normal sight、color, keep the normal range and appropriatee light.. (QC/T417.1-2001 4.2.1)
ELECTRICAL		
Item	**Requirement**	**Standard**
Connection Resistance (Voltage drop)	5mΩ Max.(initial) 10mΩ Max. (final). (QC/T417.1-2001 4.8.2/QC/T417.3-2001 5.3)	Mate connectors, measure by dry circuit, 20mV Max., 100mA Max. (QC/T417.1-2001 4.8.1)
Current Cycles	5mΩ Max.(initial) 10mΩ Max. (final). (QC/T417.1-2001 4.8.2/QC/T417.3-2001 5.3)	Mate connectors, measure by dry circuit, test current (8±2%)A (QC/T417.1-2001 4.17.1)
Temperature Rise	40℃ Max. Change allowed （QC/T 417.1-2001 4.14.2）	Mate Mate connector: measure the temperature rise at rated current until temperature stable. The ambient condition is still air at normal temperature. (QC/T 417.1-2001 4.14.1)
MECHANICAL		
Item	**Requirement**	**Standard**
The first insert connector	5mΩ Max.(initial) 10mΩ Max. (final). (QC/T417.1-2001 4.8.2/QC/T417.3-2001 5.3)	Under unlocking state,Manually mating at the rate of 25mm/min~100mm/min. (QC/T 417.1-2001 4.3.1)
The first extract to the tenth extrat connector	5mΩ Max.(initial) 10mΩ Max. (final). (QC/T417.1-2001 4.8.2/QC/T417.3-2001 5.3)	Under unlocking state,Manually mating and unmating for 10 cycles at the rate of 25mm/min~100mm/min. (QC/T 417.1-2001 4.3.1)
Terminal / Housing Mating Force (Cable Side)	Convolution of wire cross section 0.5mm²（FLRY-B 0.5平方导线），Insertion force 15N Max.(QC/T 417.1-2001 4.6.2)	1，Attach the wire to the wire attachment as tight as possible in the insertion direction.Plugins must be locked correctly. 2，Inserted with a constant insertion speed between 25mm/min~100mm/min, the speed required to be recorded in the test report. (QC/T 417.1-2001 4.6.1)
Terminal / Housing Unmating Force (Cable Side)	40N MIN. (QC/T 417.1-2001 4.7.2)	Fixed connector ,. Applying a constant force and keep （10+2/-0）s. （QC/T 417.1-2001 4.7.1）
Wire Pull Out Force	Convolution of wire cross section 0.5mm²，Anti-tensile strength 70N Min。（QC/T 417.1 4.4.2）	Operation Speed： 25mm/min~100mm/min Fix the crimped terminal, apply axial pull out

		force on the wire. (QC/T 417.1-2001 4.4.1)
Comblned temperature and Vibration	During the test the connection resistance shall not exceed 7Ω for a penod of more than 1 μs	1，Samples were plugged in 5 times. 2，The cooperating samples were placed at 50 thermal shock cycles.Each cycle includes: 30 min. at (-40 ± 2) ℃10s maximum excess time.30 min. at the highest value of the appropriate ambient temperature (grade 2, -40℃~85℃) in Table 310s maximum excess time. 3，Vibration test, connecting all plug connections, gives 100mA current, observes the resistance change of the test process, and performs the frequency change in a log curve of 1 x frequency per minute.The 16h (48h) were run in three directions perpendicular to each other.Test parameters are selected for grade A. as described in Table 5The vibration test installation method shall be indicated in the test report. (QC/T 417.1-2001 4.11.1)

6 PRODUCT QUALIFICATION AND TEST SEQUENCE

Test or Examination	Test Group					
	A	B	C	D	E	F
	Test Sequence					
Visual Examination	1,4	1,6	1,5	1,5	1,3	1,3
Terminal / Housing Mating Force (Cable Side)	2					
Terminal / Housing Unmating Force (Cable Side)	3					
Wire Pull Out Force						2
The first insert connector		2				
Connection resistance(voltage drop)		3,5	2,4	2,4		
The first extract to the tenth extrat connector		4				
Current Cycles			3			
Comblned temperature and vibration				3		
Temperature Rise					2	
Sample Size	5	5	5	5	5	5

7 ANATOMY OF CRIMPING TERMINA

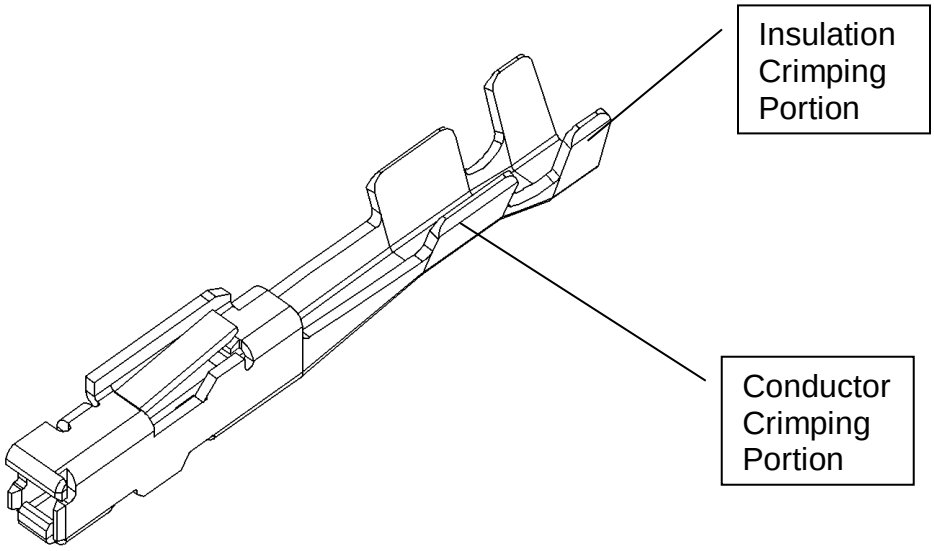

8 APPLICABLE WIRES:

Insulation OD: Φ1.6mm Conductor cross-section : 0.5mm ^{2}

9 CRIMPING CONDITION

CRIMPING CONDITION							
Part Number	Wire Specification			Crimp Height (mm)		Crimp Width (mm)	
	Style (REF.)	EQUIV CAVUS（mm²）	Insulation OD(mm)	Conductor A	Insulation B	Conductor W1	Insulation W2
92507-Txxx-CA1	FLRY-B	0.5mm²	1.60	1.10	2.20	1.45	1.55

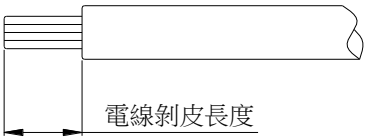

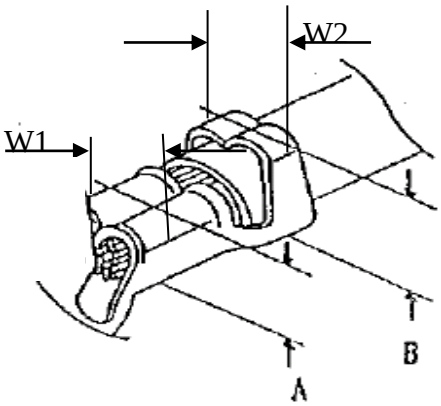

Note:

1、 W1 (Conductor Crimping Width)：W1 As in the table above

2、 W2 (Insulation Crimping Width)：W2 As in the table above

3、 A (Conductor Crimping height)：A As in the table above (Reference value）

4、 B (Insulation Crimping height)：B As in the table above (Reference value）

5、 (Strip length)：3.0~3.5mm(Reference value)

10 CRIMPING HEIGHT MEASUREMENT

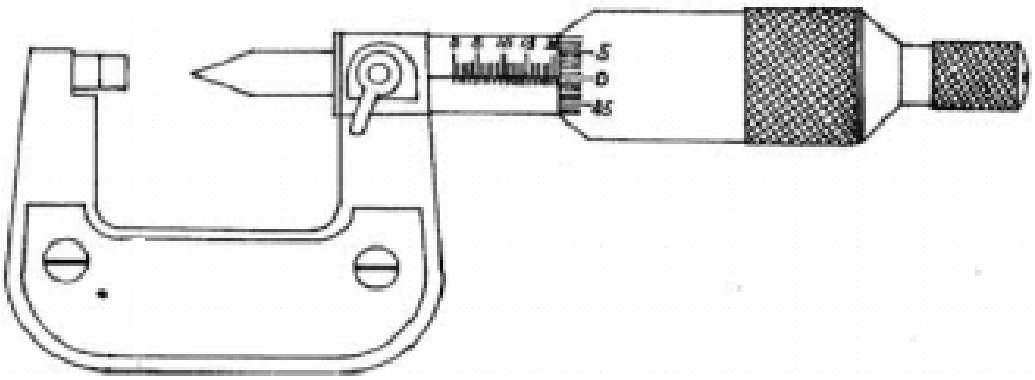

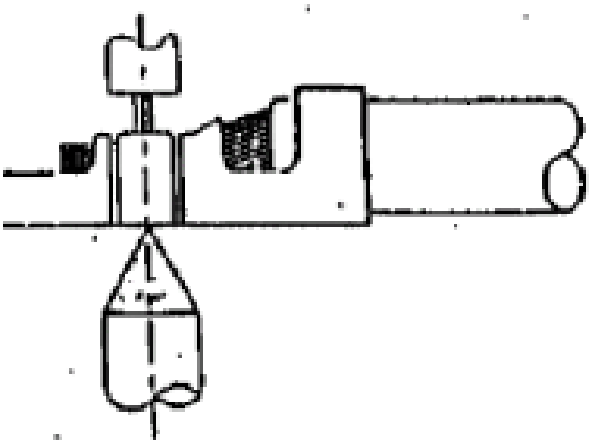

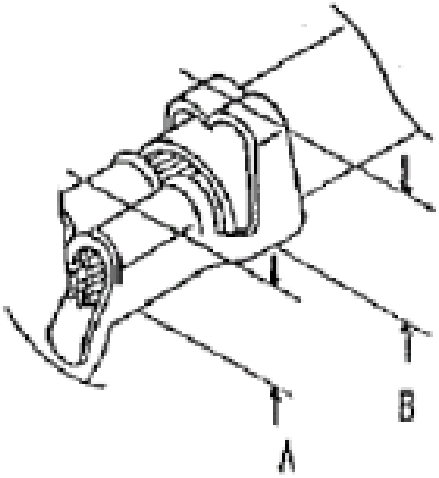

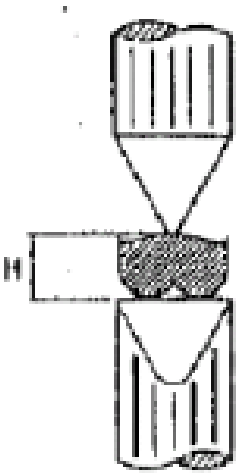

11 PULL FORCE OF CRIMPING SECTION MEASUREMENT

Before test samples, please measure crimp height and do not crimp insulation.

Pull Force of Crimp Section Measurement

12 STANDARD INSULATION CRIMPING

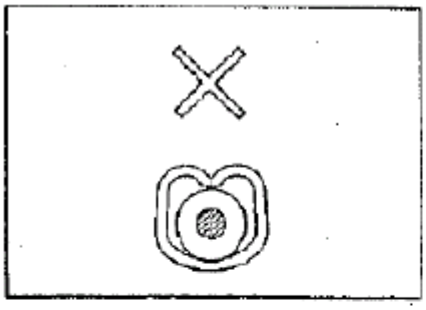

Not enough crimp

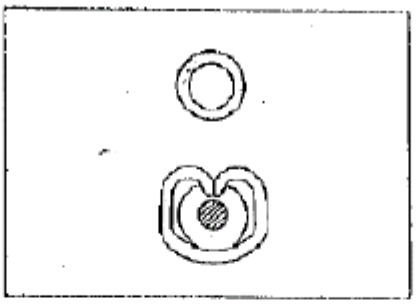

Good

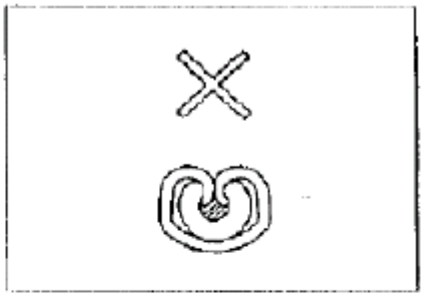

Crimp too much

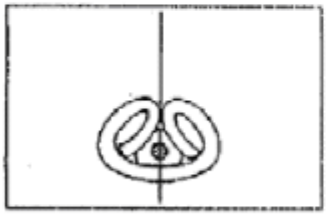

Good

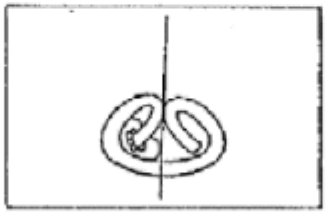

NG

Insulation Crimp Condition

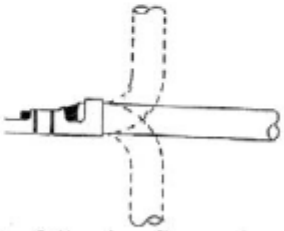

As following figure shown. It is no problem if wire bent up down 90 degrees 1 cycle and insulation position still in ideal position.

13 CONDUCTORS CRIMPING CONDITION

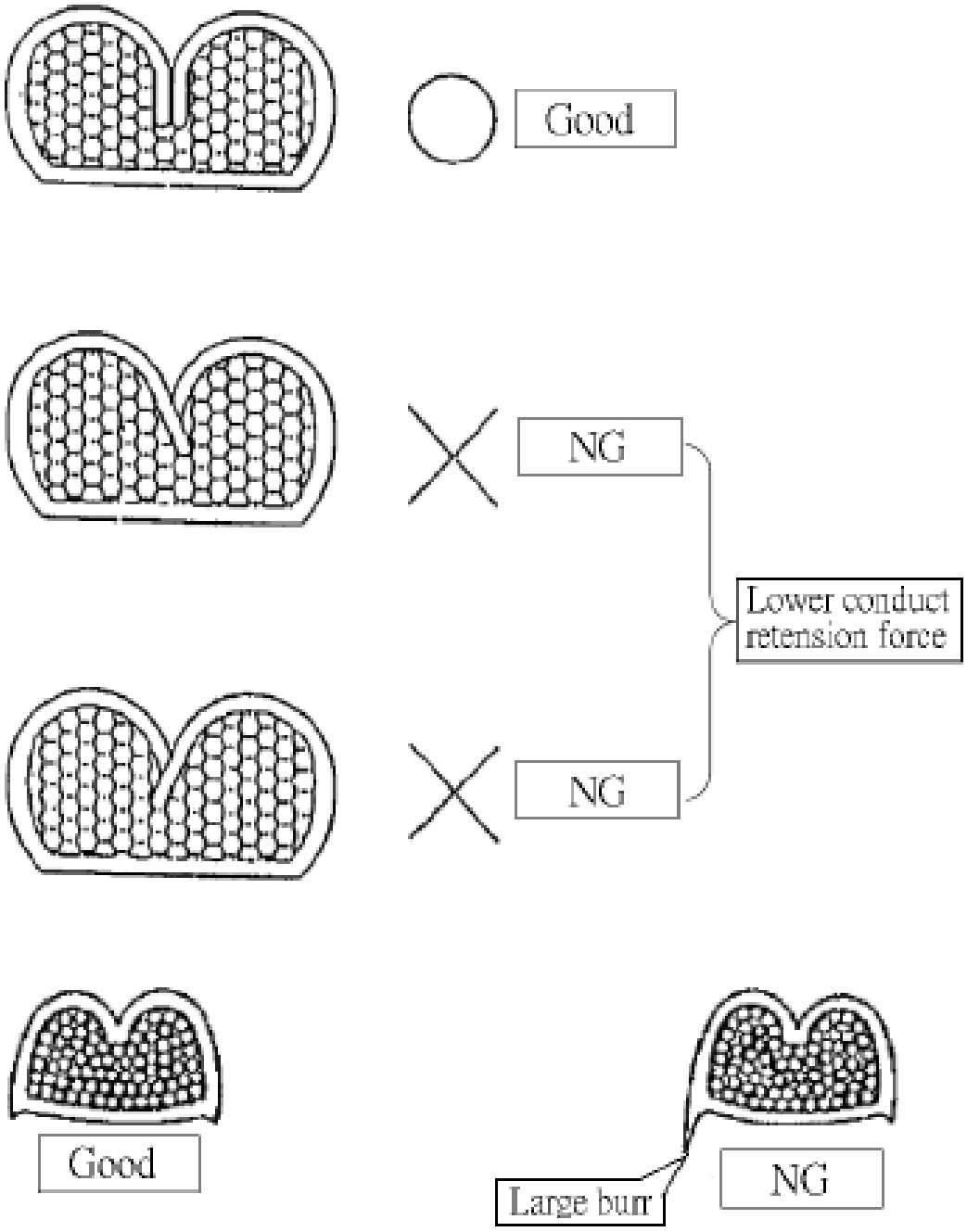

14 CRIMPING REQUIREMENT

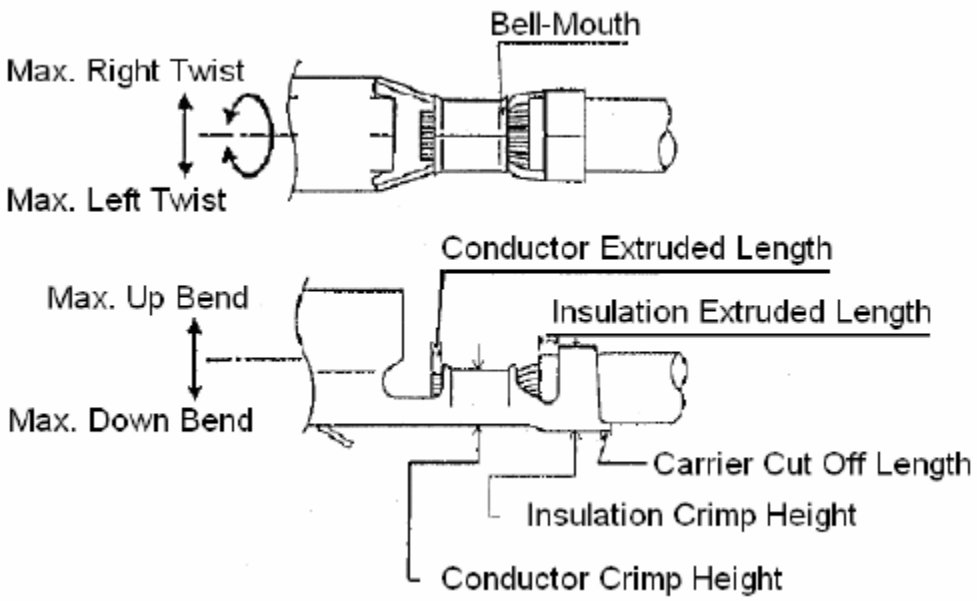

Item	Range(Ref.)
Max. Up Bend	6°
Max. Down Bend	6°
Max. Left Twist	5°
Max. Right Twist	5°
Bell-Mouth Length	0.1~0.3mm
Carrier Cut Off Length	0~0.2mm
Conductor Extruded Length	0.05~0.2mm

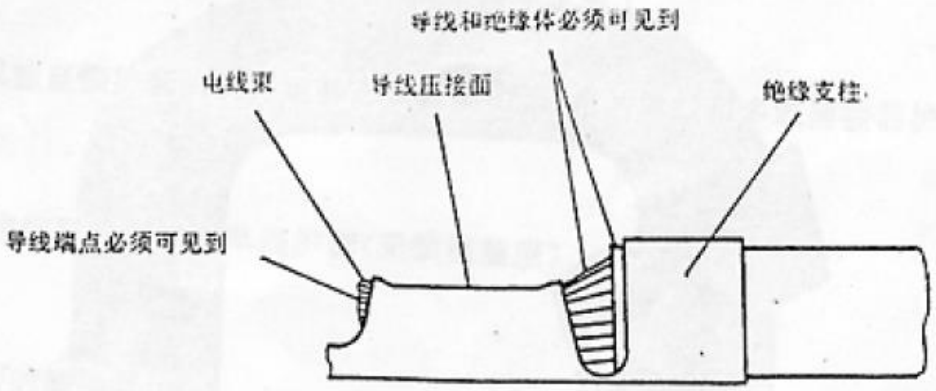

图 5 导线与插接件的压接连接

表 3 接触电阻最大允许值

接触电阻		
开始时	试验后	
	1*	2*
mΩ 最大 5	mΩ 最大 10	开始测量值的% 最大 150

* 由供需双方选择

表 3 环境和试验温度

分级	环境温度，℃		试验温度，℃
	最小值	最大值	±2
1	−40	70	85
2	−40	85	100
3	−40	100	125
4	−40	125	155
5	−40	155	175

表 5 结合温度振动试验参数

等级	低频/振幅	高频/加速度	
A	10 Hz～55 Hz /±0.75 mm	>55 Hz～500 Hz/ 10 g	
B	10 Hz～80 Hz /±0.75 mm	>81 Hz～500 Hz/ 20 g	>500 Hz～2 000 Hz/ 18 g
C	10 Hz～100 Hz /±0.75 mm	>100 Hz～500 Hz/ 30 g	>500 Hz～2 000 Hz/ 20 g